Electrolux PROFESSIONAL

# Modular Cooking Range Line thermaline 80 - Sink unit on closed base, 1 Side, Backsplash, H=700

ITEM #

MODEL #

NAME #

SIS #

AIA #

**588214 (MAZAGBD300)** Sink Unit on Closed Base, one-side operated with backsplash

## Short Form Specification

**Item No.**

Sink unit on closed base, with a large stainless steel tap, constructed according to DIN 18860_2 with 20 mm drop nose top and 70 mm recessed plinth. Internal frame for heavy duty sturdiness in stainless steel. 2 mm top in 1.4301 (AISI 304). Flat surface construction, easily cleanable. THERMODUL connection system enables seamless worktop when units are connected and avoids soil penetrating.
IPX5 water resistant certification.
Configuration: Freestanding, one-side operated with backsplash.

**APPROVAL:**

## Main Features

- Large stainless steel tap.
- All major components may be easily accessed from the front.
- THERMODUL connection system creates a seamless work top when units are connected to each other thus avoiding soil penetrating vital components and facilitating the removal of units in case of replacement or service.

## Construction

- IPX5 water resistance certification.
- Fitted on a closed base.
- 2 mm top in 1.4301 (AISI 304).
- Unit constructed according to DIN 18860_2 with 20 mm drop nose top and 70 mm recessed plinth.
- Flat surface construction with minimal hidden areas to easily clean all surfaces
- Internal frame for heavy duty sturdiness in stainless steel.

# Modular Cooking Range Line thermaline 80 - Sink unit on closed base, 1 Side, Backsplash, H=700

Front

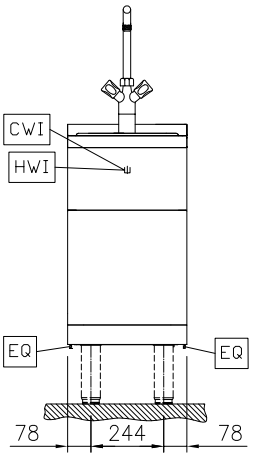


Side

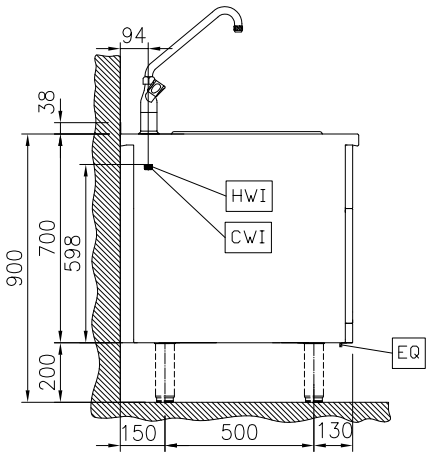


CWI1 = Cold Water inlet 1 (cleaning)
D = Drain
HWI = Hot water inlet

Top

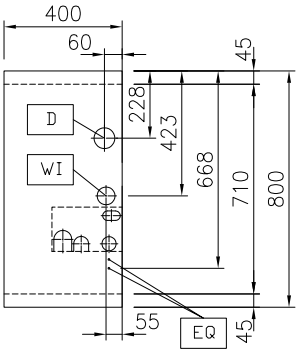


## Water:

| | |
|---|---|
| **Inlet water line size:** | |
| **588214 (MAZAGBD300)** | 3/4" |
| **Drain line size:** | 1" |
| **Incoming Cold/hot Water line size:** | 3/4" |

## Key Information:

| | |
|---|---|
| **External dimensions, Width:** | 400 mm |
| **External dimensions, Depth:** | 800 mm |
| **External dimensions, Height:** | 700 mm |
| **Net weight:** | 28 kg |




The company reserves the right to make modifications to the products without prior notice. All information correct at time of printing.

## Optional Accessories

- Connecting rail kit for appliances with backsplash, 800mm — PNC 912497 ❑
- Portioning shelf, 400mm width — PNC 912522 ❑
- Portioning shelf, 400mm width — PNC 912552 ❑
- Folding shelf, 300x800mm — PNC 912577 ❑
- Folding shelf, 400x800mm — PNC 912578 ❑
- Fixed side shelf, 200x800mm — PNC 912583 ❑
- Fixed side shelf, 300x800mm — PNC 912584 ❑
- Fixed side shelf, 400x800mm — PNC 912585 ❑
- Stainless steel front kicking strip, 400mm width — PNC 912630 ❑
- Stainless steel side kicking strip left and right, against the wall, 800mm width — PNC 912658 ❑
- Stainless steel side kicking strip left and right, back-to-back, 1610mm width — PNC 912661 ❑
- Stainless steel plinth, against wall, 400mm width — PNC 912840 ❑
- Connecting rail kit for appliances with backsplash: modular 80 (on the left), ProThermetic tilting (on the right), ProThermetic stationary (on the left) to ProThermetic tilting (on the right) — PNC 912977 ❑
- Connecting rail kit for appliances with backsplash: modular 80 (on the right), ProThermetic tilting (on the left), ProThermetic stationary (on the right) to ProThermetic tilting (on the left) — PNC 912978 ❑
- Back panel, 400x700mm, for units with backsplash — PNC 913009 ❑
- Stainless steel panel, 800x700mm, against wall, left side — PNC 913093 ❑
- Stainless steel panel, 800x700m, against the wall, right side — PNC 913097 ❑
- Endrail kit, flush-fitting, with backsplash, left — PNC 913113 ❑
- Endrail kit, flush-fitting, with backsplash, right — PNC 913114 ❑
- Endrail kit (12.5mm) for thermaline 80 units with backsplash, left — PNC 913204 ❑
- Endrail kit (12.5mm) for thermaline 80 units with backsplash, right — PNC 913205 ❑
- U-clamping rail for back-to-back installations with backsplash — PNC 913226 ❑
- Insert profile D=800mm — PNC 913230 ❑
- Side reinforced panel only in combination with side shelf, for against the wall installations, left — PNC 913263 ❑
- Side reinforced panel only in combination with side shelf, for against the wall installations, right — PNC 913265 ❑
- Stainless steel dividing panel, 800x700mm, (it should only be used between Electrolux Professional thermaline Modular 80 and thermaline C80) — PNC 913668 ❑
- Stainless steel side panel, 800x700mm, flush-fitting (it should only be used against the wall, against a niche and in between Electrolux Professional thermaline and ProThermetic appliances and external appliances - provided that these have at least the same dimensions) — PNC 913684 ❑



The company reserves the right to make modifications to the products without prior notice. All information correct at time of printing.

2024.10.06